vec GO

evec

7.4kW-22kW EV Wall Charger

Models: VEC01-N, VEC02-N, VEC03-N, VEC04-N

Installer: Leave this manual with the owner

Read and save these instructions

Download the evec app

Table of Contents

Safety Instructions 3

User Instructions 4-7

Technical data
Product description
Product dimensions
Indicator light
Button functions
Power management
EV charger group management model
Socket lock
PEN fault protection
Telecommunication

Installation Instructions 8-20

Unpacking
Attachment
Tools/materials required
Before installation
Installation location
Warning
Connect electrical wiring
Installation
Installation of the cable holder
The instruction of the cable holder
Set the charger power
Inspection

App Instructions 21-28

Register
Add device
Operate introduction
Fault interface
Alarm

OVO Link Guide 29

Maintenance 30

Troubleshooting 31

Safety Instructions

IMPORTANT
Please read this booklet before installing and switching on this appliance. The manufacturer assumes no responsibility for incorrect installation and usage as described in this booklet. Keep the instruction book for future reference. All the information in the manual is valid for the charging station model in this manual.

This instruction book details the install guidance for the **evec** car charger VEC01-N / VEC02-N / VEC03-N / VEC04-N. If you're unsure which model you have, please check the rating label on the side of the charger.

The **evec** car charger is designed for installations inside or outside, with the Innovative safety systems we have built into the charger ensuring its safe usage. This guidance provides information to assist when installing the unit. The charger must be professionally installed by a qualified electrician according to local and national regulations applicable at the time of installation and used in accordance with the manufacturer's instructions.

The **evec** car charger is designed to be connected to an electrical installation that already complies with BS7671 standard as a minimum. The unit should be connected to one dedicated AC supply only and the supply must be adequately rated for the additional load required for EV charging.

- This unit must be grounded (Earthed).
- This unit is only to be installed by a qualified electrician in accordance with local building and electrical codes and standards.
- This unit is designed to connect a electrical supply voltage of AC220V~240V 50/60Hz for single phase series (VEC01-N/VEC03-N) / AC380V~415V 50/60Hz for three-phase series(VEC02-N/VEC04-N).
- The charger must be installed on a secure solid and relatively flat surface that can support the weight of the charger. Failure to install on a secure surface or not in accordance with electrical regulations could lead to death, personal injury, or property damage.
- This appliance is designed to be used by adults, do not allow children to play with the appliance or let them hang over the charger.
- Do not put fingers into the socket or connector.
- This unit is not suitable for use in dangerous places where there is high amounts of dust, dangerous gas or in an explosive and flammable environment.
- In order to ensure the electrical safety of the unit, the product body shell must be fixed to the correct position with fasteners that come with the product and the seals used to ensure the IP rating is maintained.
- The unit's inlet position (front face) must be tightly sealed to be waterproof and dustproof to ensure the products IP rating.
- Do not use this unit other than its intended purpose.
- Do not use if the socket or connector or cable is damaged.
- Disconnect the charging from the vehicle prior to driving off.
- To prevent electrical shock,do not plug-in or un-plug with wet hands .
- Do not use a power washer to clean or wash the car charger.
- Do not install in areas of high-risk chance of impact by vehicles or a high risk of trip hazard.

IMPORTANT
Under no circumstances will compliance with the information in this manual relieve the user of his/her responsibility to comply with all applicable codes or safety standards.

Technical Data

Model		VEC01-N	VEC02-N	VEC03-N	VEC04-N
Input	Power Supply	1P+N+PE	3P+N+PE	1P+N+PE	3P+N+PE
	Rated Voltage	AC220 ~ 240V 50/60Hz	AC380 ~ 415V 50/60Hz	AC220 ~ 240V 50/60Hz	AC380 ~ 415V 50/60Hz
	Rated Current	Max 32A (6-32A adjustable)			
Output	Output Voltage	AC220 ~ 240V 50/60Hz	AC380 ~ 415V 50/60Hz	AC220 ~ 240V 50/60Hz	AC380 ~ 415V 50/60Hz
	Maximum Current	Max 32A (6-32A adjustable)			
	Rated Power	7.4kW	22kW	7.4kW	22kW
Configuration	Charger Socket or Connector	Type 2			
	Material	ABS + PC Flammability Rating V - 0			
	Colour	Black			
	Indicator Light	LED Light			
Safety	Ingress Protection	IP55		EV Connector: IP54 Enclosure: IP55	
	IK Protection	IK10			
	PCB Protection	Over Current Protection: MAX 32A - Recommended 36A			
		Residual Current Protection: AC TYPE A 30mA, DC6mA			
		Earth Check			
		Over/Under Voltage Protection			
		Over Temperature			
		PEN Fault Protection			
	Certification	CE, UKCA			
	Certification Standard	EN 61851, EN 62196			
Power Consumption	Standby Power Consumption	<10W			
Environment	Installation	Wall Mounted			
	Work Temperature	-25°C ~50°C			
	Work Humidity	3% ~95%			
	Work Altitude	<2000m			

Product Description

1. Front Cover
2. Working Status Indicator
3. RFID Area
4. Socket
5. Charger Holder
6. Charging Lead and Connector

Product Dimensions

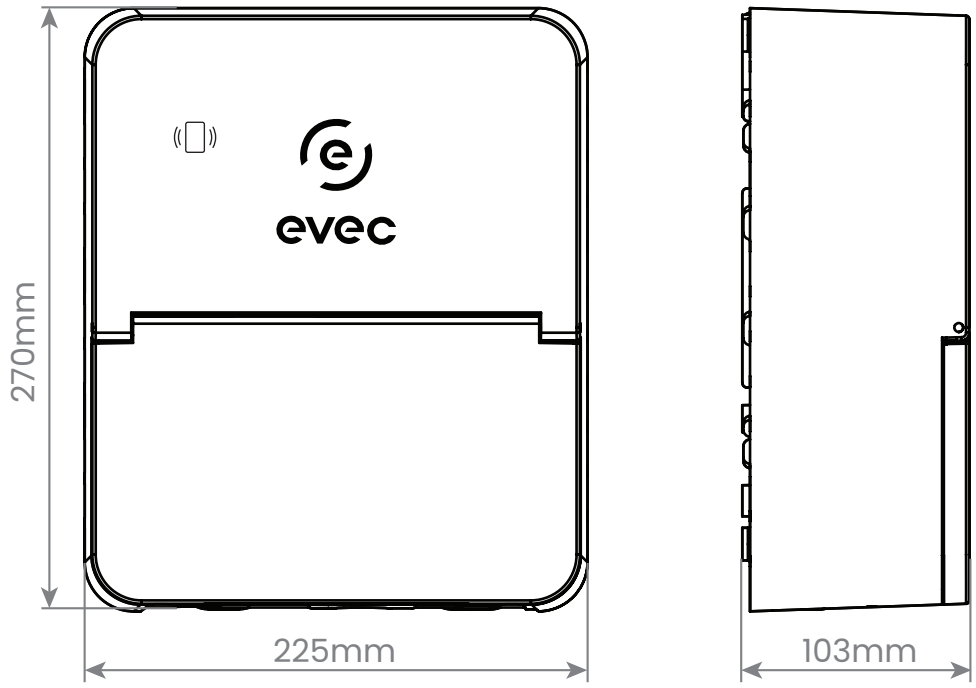

Indicator Light

Light Display Status	Product Status
Blue, green and red flashing alternately	Product power-on self-check
Blue light glowing	Standby
Blue light flashing	Connection confirmation
Green light glowing	Charging
Green light flashing	Turn off charging from APP or OCPP
Red light	Over temperature
Yellow light glowing	URL/ID configuring
White light glowing	Configuration function

Card Swiping Configuration Function

In the blue light (standby) state, use the bound card and keep it in the card swiping area for more than 10 seconds to enter the configuration state (displayed by the white light).

Function	Operation	Status Indicators	Remark
The randomized delay off or on	Swipe the card once	Beep once	If there is no operation within 10 seconds, it will return to standby mode (with the blue light constantly on).
Enter plug and charge mode	Swipe the card twice	Beep twice	
evec APP WIFI Reset	Swipe the card fourth	Beep fourth	

RFID

RFID function, you need to make sure that the car is plugged in and ready for charging by the charger. Whilst plugged in there will be a confirmation on the screen, tap your card in the RFID area of the charger to start charging. When you wish to stop charging tap the RFID card area with your card again. When tapping the card to stop charging, you must tap the card with the same card number that was used to start charging.

Note: After starting and stopping charging once, tapping your card in the RFID area in connection confirmation mode will not continue to charge. If you want to continue charging, you need to unplug the connector and reconnect to the electric vehicle.

Power Management Instruction

Product with power management function can self-regulate the output current to keep the total household electricity load not exceeding the total household current.

Note: For three phase If the current values of the three live wires monitored by the three-phase power are not equal, the product will calculate the minimum output current by itself, and the three output lines will be executed according to this minimum output current; to set the maximum power after the product is connected to the WIFI, open the APP and go to settings and then input numerical value into “DLB value”. For detailed settings, please refer to “DLB value”.

Socket Lock

The EV cable will be locked when the connector plugged into the EV car. The EV cable will be unlocked when the conncetor is unplugged from the EV car or power off the charger.

Note: When the socket lock malfunctions and fails to back, it needs to be manually unlocked with the lock tether. Refer to "**MANUAL RESET SOCKET LOCK INSTRUCTIONS**".

Pen Fault Protection

The Protective Earth and Neutral (PEN) conductor refers to part of the electricity supply cable to the property. If this conductor is damaged there is a chance that the chassis of the electric vehicle becoming "live" and cause an electric shock, BS7671:2018 Amendment 1:2020 part 722.411.4.1 reauires that extra protection is provided to prevent an electric shock - either by fitting an earth electrode or through a device which detects the fault and disconnects the supply.

The **evec** charger has RCD2 protection/N-E voltage protection (more than 70V) , will disconnect the output if it detects a problem with the PEN conductor or detects that there may be any electric current flowing through the chassis of the EV. This PEN fault protection means that there is no need to install an earth electrode with the unit.

If the unit detects a problem with the PEN conductor then the red light will start flashing two fast, two slow.

Telecommunication

This product complies with the OCPP1.6J service protocol. After you set the URL and ID by the Phone/PC, and the network cable is connected to the Ethernet interface, the product will automatically connect to the server to realize backstage control.

To set the URL and ID:
1 (evec app): Refer to the "**setting**" in the APP.
2 (PC): Refer to "**Configure URL/ID/APN using Ethernet**".
3 (phone): Refer to "**Configure URL/ID/APN by phone(IOS System)**".

Note: Instructions for OCPP control setup in commercial / workplaces where a IT security system exists by a firewall.

When connecting the charger to be used through OCPP the dip switch must be set and the Ethernet cable connected to the RJ45 port. For OCPP use in workplace environment where a firewall exists then the following will need to be performed by the workplace IT department for the charger to able to be used through OCPP.

In order for the device to send and receive heart beats the firewall will require the mac address to be allowed in and out of the corporate firewall. The mac address can be found on the sticker (rating label) on the bottom of the charger.

Note: EV charger with the same mac address cannot be installed under the same router. If any security features are enabled then the device will require being added to the bypass / whitelist groups. For instance if the firewall has content filtering, DPI-SSL, intrusion prevention then the device will require being white listed through these also. If you want to do this using IP address, then it will require the IP to be static/reserved.

Unpacking

1. Take the charger out of the box.
2. Follow the '**Attachment**' to check all items and to see if there are any missing.
3. Check the unit is correct and whether it matches with order model.
4. Check whether the unit has defects or is damaged due to defectiveness or transportation.
5. Make sure all packaging is disposed of responsibly and in accordance with the current regulations in your region.

Attachment

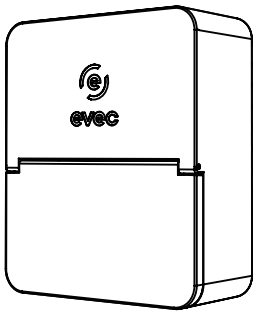

1 x EV Charger

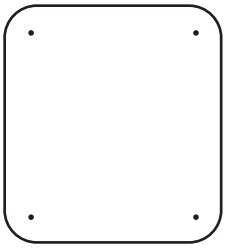

Installation template

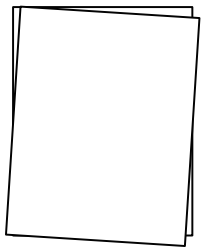

Manual & Warranty card

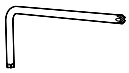

T10 spanner

Wiring cap

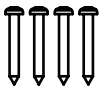

4 x Screw
ST4.2x32

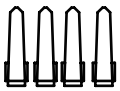

4 x Wall plugs
ø6x30

RFID card

Tower sealing
rubber

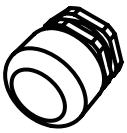

Cable Gland PG21
for Power supply
incoming wire

Sealing ring A
for single phase
(Inner hole ø17)

Cable Gland
PG19 for ethernet
and CT wire

Sealing ring B
for ethernet
(Inner hole ø10)

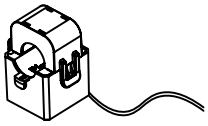

CT*

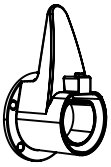

Charger holder**

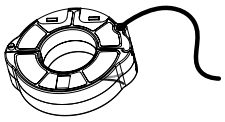

CT(400A)***

Shielded twisted-pair***

Note: If you are missing any of these parts, contact the customer services **0161 249 6780.**
*This is an optional extra.
** Just for the charger model with the tethered.
***Use for EV charger group management model.
These spare parts are not included in the unit, you must buy from distributors.

Tools/Materials Required (NOT INCLUDED)

Electric drill

Measuring tape

Safety gloves

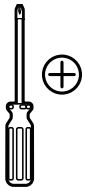

Phillips screwdriver

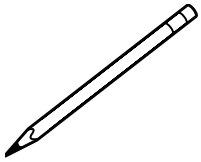

Pencil

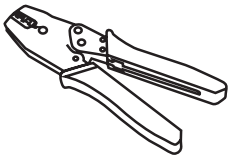

Crimping pliers

Before Installation

1. Installer or end user must read and understand all the content covered in this manual before installing or using this unit.
2. Choose a suitable installation location to install.
3. Make sure that the installation location complies with current laws and regulations.
4. Confirm that there is a suitable input voltage power supply at the installation site (consistent with the nominal power supply of the product).
5. Make sure the supplied fixings are suitable for the mounting location. If not suitable, alternatives must be obtained locally before proceeding with the installation

WARNING

- Make sure that the power source is turned off before installing the unit.
- Manufacturers and distributors are not responsible for any loss or related responsibilities caused by any incorrect installation.
- The installer shall be responsible for the loss and damage of the product, system or property caused by improper installation.

Important: Before installing the unit, it necessary to confirm the way of the product's power cable entry. Mode 3 power cable entry is strictly not allowed.

Mode 1 ✓

Bottom entry (Best choice)

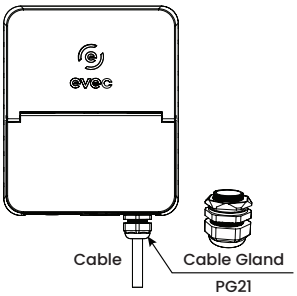

Mode 2 ✓

Back entry

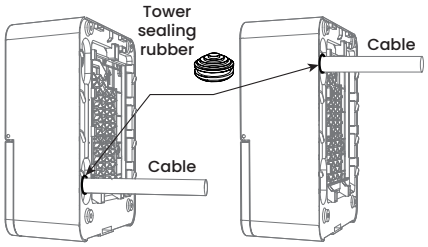

Mode 3 ✗

It is strictly forbidden to pass the bottom line through the back.

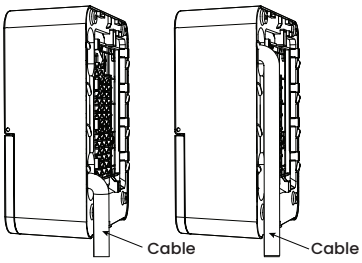

Connect Electrical Wiring

Single Phase Wiring

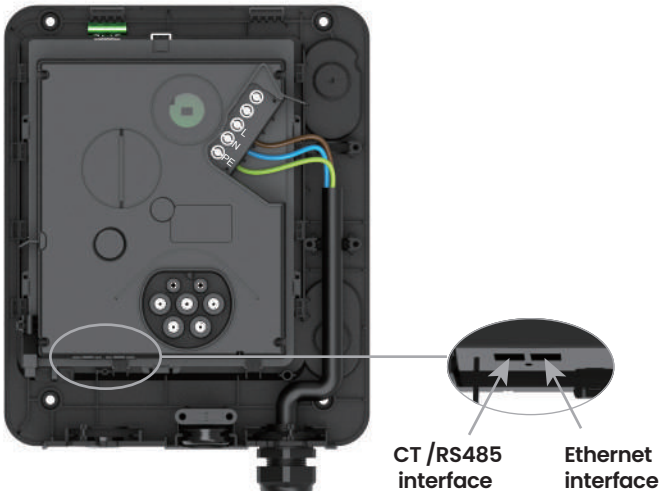

Three-Phase Wiring

Recommended the incoming wire size (copper), for all models:

Min. incoming wire size (copper)- 6mm² or 10AWG
Max. incoming wire size (copper) 10mm² or 8AWG

Note 1: The charger must be electrically protected by installing externally a Miniature Circuit Breaker (MCB) and any other protection devices(such as an RCD or RCBO) according to the wiring regulations at the time. The MCB/RCD/RCBO cannot less than 40A.

Note 2: Input voltage power supply consistent with the nominal power supply of the product.

Installation

Fig.1

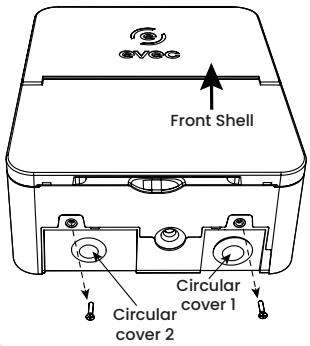

Fig.2

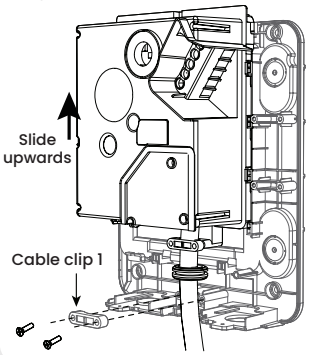

Fig.2-1

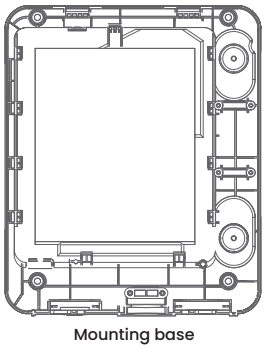

Fig.2-2

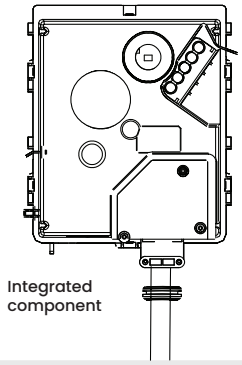

1. **Open the front shell.** Remove the two screws use T10 spanner at the bottom of the unit and carefully remove the front shell. Keep the screws well for future use.
2. For tethered unit, loosen the cable clip 1, press and hold the mounting base (*Fig.2-1*) and slide the integrated components (*Fig.2-2*) upwards to separate them from the mounting base (*Fig.2*).
3. Mark the holes at the installation positions with the installation template or mounting base. When marking the positions, ensure that the mounting base /the installation template itself is level.
4. Drill 4 holes (hole 1, 2, 3, 4) according to the information prompted by the installation template, and ensure that the hole positions are accurate. (*Fig.3*) The diameter of the installation hole is 6mm and the depth is about 35mm.
5. Installation hole inner - insert wall plugs (*Fig.4*)
6. Inlet wire. According to the entry mode as you need (mode 1: bottom entry or mode 2: back entry). Proceed with the subsequent installation.

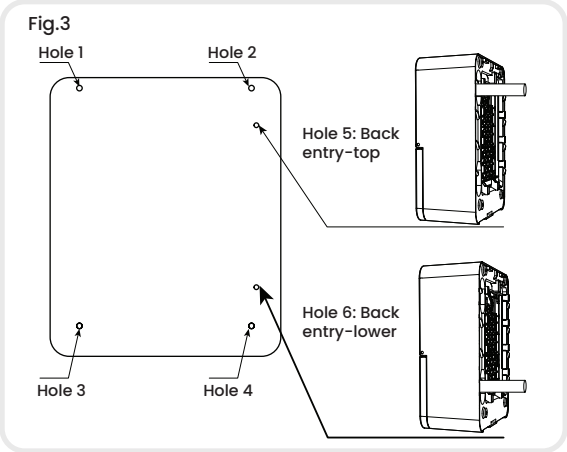

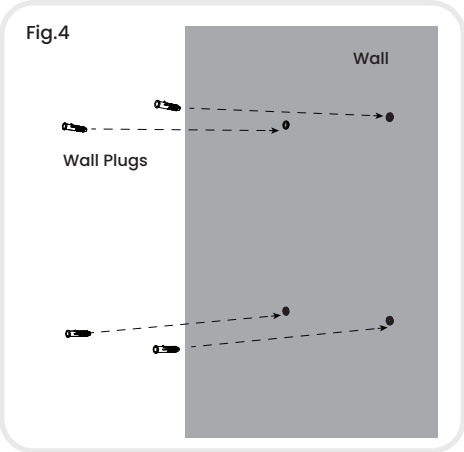

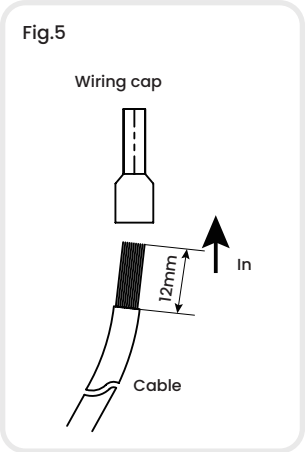

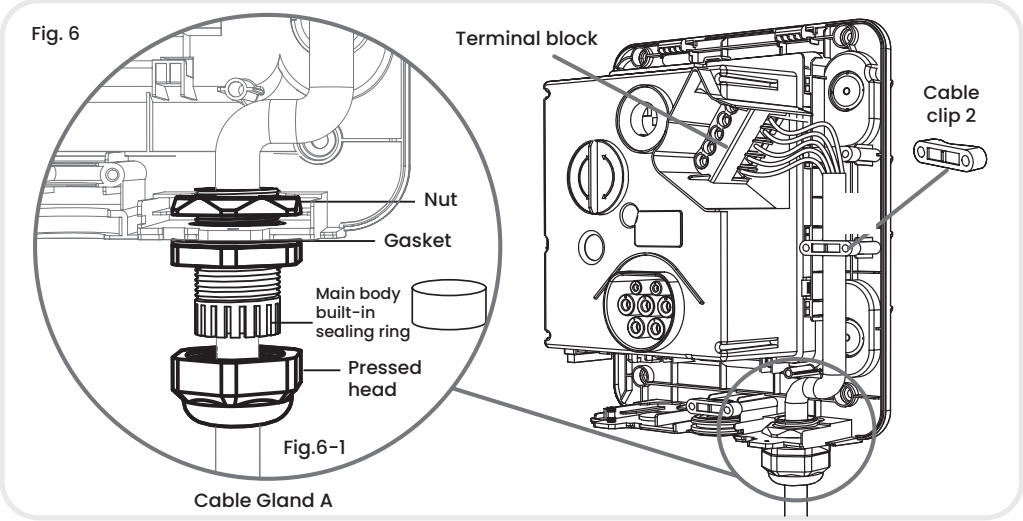

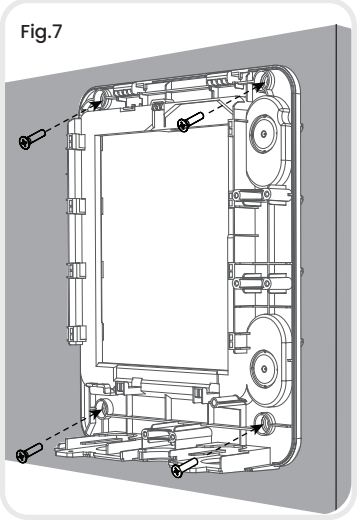

7A Mode 1: Bottom entry - Installation method

a1 Open the circular cover 1 (*Fig.1*) at the bottom of the unit.Open the cable clip 2 (*Fig.6*).

a2 Install the mounting base into the installation hole with screws (*Fig.7*).

a3 For tethered unit. Slide the integrated components along the tracks of the mounting base into the mounting base and assemble them properly (*Fig.8*).
Note: The Charging lead sealing ring needs to be perfectly fitted to the position of the outlet hole at the bottom of the mounting base(*Fig.8-2*).Then use cable clip 1 to fix the charging lead (*Fig.8-2*).

a4 Check the cable gland PG21 parts (*Fig.6-1*).
Note: For single-phase models, the built-in rubber ring needs to be replaced with the rubber ring A of the accessory.

a5 Pass the gasket and the main body through the opening hole of the shell and lock it with a nut (*Fig.6*).

a6 Insert the pressing head into the cable, and thread the cable into the main body as shown in (*Fig.6-1*).

a7 Trim and cut the cable to the proper length, lock the pressing head to secure the cable.

a8 Refer to "CONNECT ELECTRICAL WIRING" to connect the cable to the terminal block. Lock the pressing head to secure the cable.
Note: Connecting wiring cap reference (*Fig.5*).

▲ **WARNING:** To ensure the rated IP protection level of the product, must use the cable gland in the accessories.

a9 Ensure that all cables are connected correctly and securely, and are not lose or damaged. Use cable clip 2 to fix the power cable.

Back entry-top incoming cable

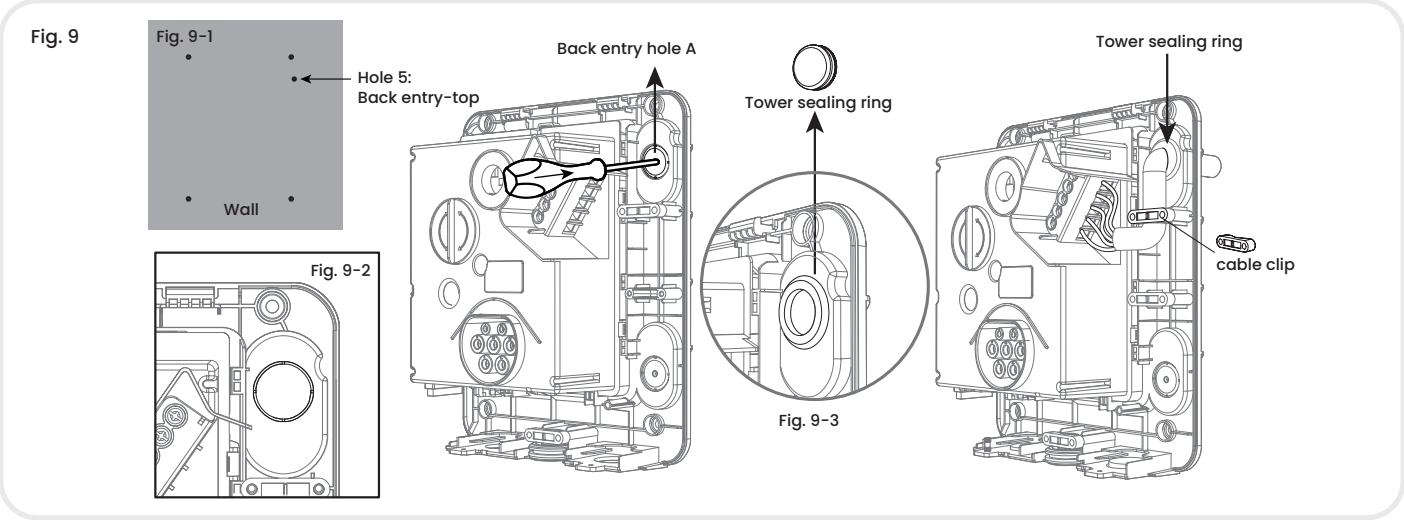

Back entry-lower incoming cable

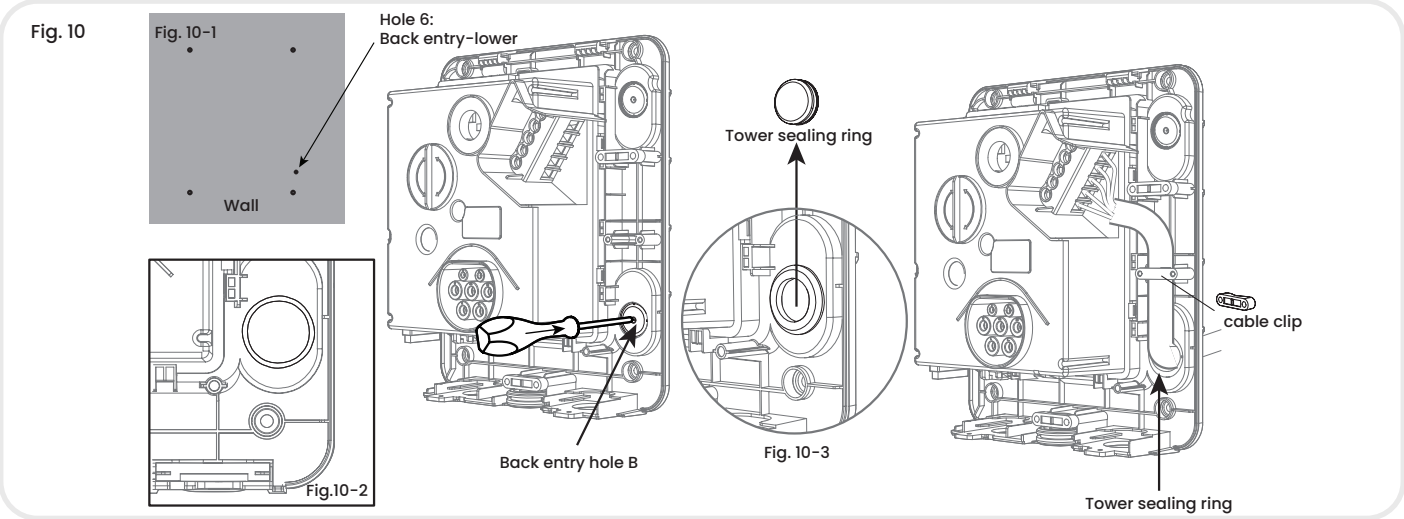

7B Mode 2: Back entry - Installation method

Determine the wiring method (A: top or B: lower) according to the installation requirements.

b1 Drilling the cable entry hole at the installation position.
Note: The top incoming cable requires drilling hole 5 in the wall. (*Fig.9-1*)
Note: The lower incoming cable requires drilling hole 6 in the wall. (*Fig.10-1*)
Diameter of the cable entry hole needs to be defined according to the actual cable selection, However, it is recommended that the maximum opening diameter should not be bigger than 24mm.

▲ **CAUTION:** The edge of the wall opening needs to be repaired, and it must not be a sharp edge to prevent the incoming wire from being damaged.

b2 Open the back entry hole. It is recommended to use a screwdriver to align with the center point A or B. Knocking on the screwdriver can open the plastic cover. Clean the burrs around to avoid scratching.
Note: Hole A for upper entry (*Fig.9-2*), Hole B lower entry (*Fig.10-2*).

b3 Open the tower sealing ring according to the diameter of the incoming cable to ensure that the incoming cable can pass through and to guarantee the waterproof grade.And install the tower sealing ring on the back entry hole of the mounting base.

b4 Pass the power cable through the sealing ring, mounting base.

b5 Install the mounting base into the installation hole with screws (*Fig.7*).

b6 For tethered unit. Slide the integrated components along the tracks of the mounting base into the mounting base and assemble them properly (*Fig.8*).
Note: The Charging lead sealing ring needs to be perfectly fitted to the position of the outlet hole at the bottom of the mounting base (*Fig.8-2*).Then use cable clip 1 to fix the Charging lead (*Fig.8-2*).

b7 Refer to "**CONNECT ELECTRICAL WIRING**" to connect the cable to the terminal block. Lock the pressing head to secure the cable.
Note: Connecting wiring cap (*Fig.5*).

Fig. 11

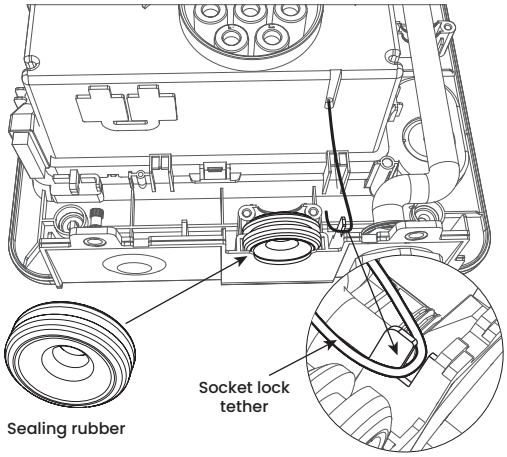

Fig. 12

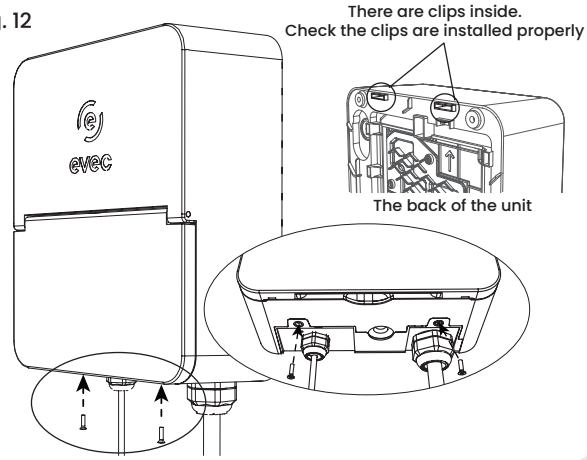

7 Install the front cover

7.1 Before installing the front cover, (non-tethered model) needs to be checked and it should be ensured that the seal is correctly installed on the installation base. To ensure the waterproof grade (*Fig.11*).

7.2 To ensure the subsequent use of the electronic lock function, before installing front cover (non-tethered model), the socket lock tether needs to be placed in the correct position (*Fig.11*).

7.3 Before installing the front shell, install CT, 4G card, Ethernet, configure Ethernet and other installation work according to your needs.

7.4 The mounting base and the interior of the front shell are equipped with assembly clips. To ensure the IP rating, it is necessary to make sure that the clips are properly assembled with the front shell. Fix the front cover to the unit with screws (*Fig.12*).

Note:
A) Product installation details with OCPP1.6J service agreement. Refer to "Network Connection guide".
B) Product installation details with 4G Card. Refer to "Installation of 4G card".
C) Configure URL / ID / APN by PC. Refer to "Configure URL/ID/APN using Ethernet".
D) Configure URL / ID / APN by phone. Refer to "Configure URL/ID/APN using Ethernet".
E) Product installation details with power management. Refer to "Power management function installation guide".
F) Product installation details with charger group management. Refer to "EV charger group management model guide."

Installation of the cable holder

1. Take out the charger holder.
2. Find a suitable location near the EV charger box, which must be more than 0.5m above the bottom surface and not higher than 1.5m.
3. Align the charger holder in position and mark the four mounting holes.
4. Drill the 4 holes as the marks at dia 6mm, 35mm deep.
5. Insert the wall expansion plug.
6. Screw the charger holder to the wall.
7. Installation is complete.

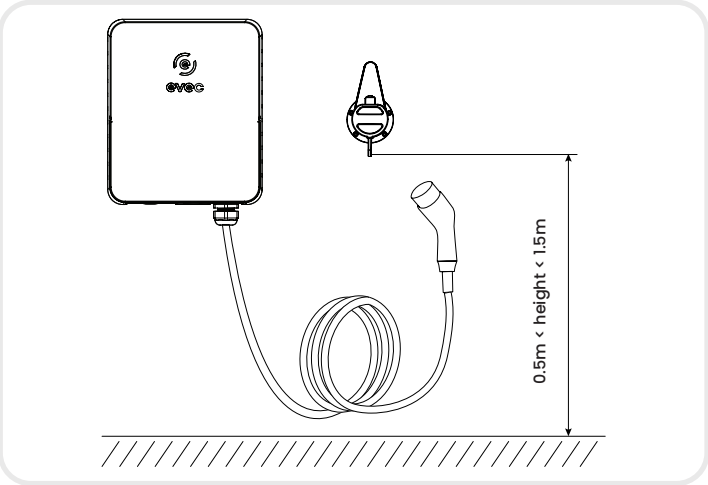

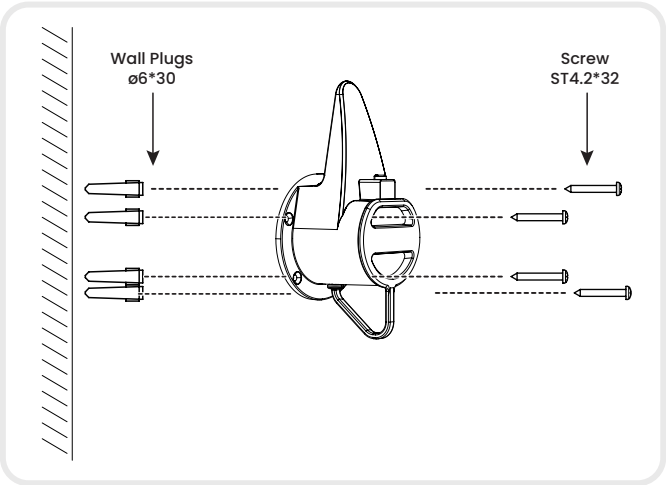

The instruction of the cable holder

1. There is a clicking sound when the tip is inserted.
2. When pulling out the charger, you must first press the lock button and pull out the charger at the same time.

Manual reset socket lock instructions

When the socket lock malfunctions and fails to back, it needs to be manually unlocked with the lock tether. When a charging gun is locked and cannot be pulled out.

1. Pull the gun out just a little bit.
2. Remove the screws under the front shell (*Fig.1*) and slightly open the front cover to create some gap between the front cover and the machine.
3. Find the lock tether through the gap and use a small tool to take it out of the machine.
4. Pull down to open the socket lock tether and you can pull out the gun.

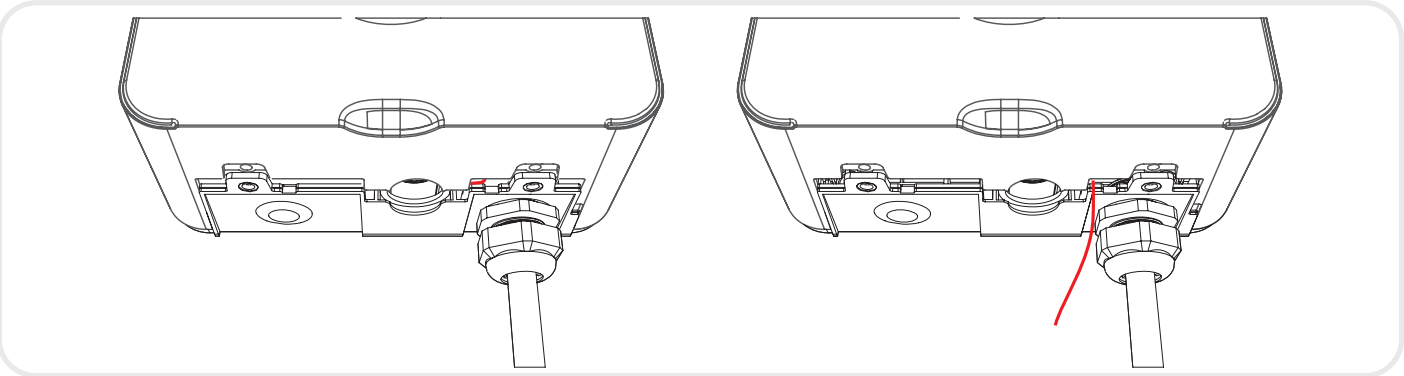

CT/RS485 terminal instructions

The CT/RS485 terminal blocks have been installed on the unit before leaving the factory

Single-phase model: CT connection (terminal No.7/8)
Three-phase model: CT1 connected (terminal No.7/8),
CT2 connected (terminal No.5/6),
CT3 connected (terminal No.3/4),
RS485 connected (terminal No.1/2)

Fig. 13

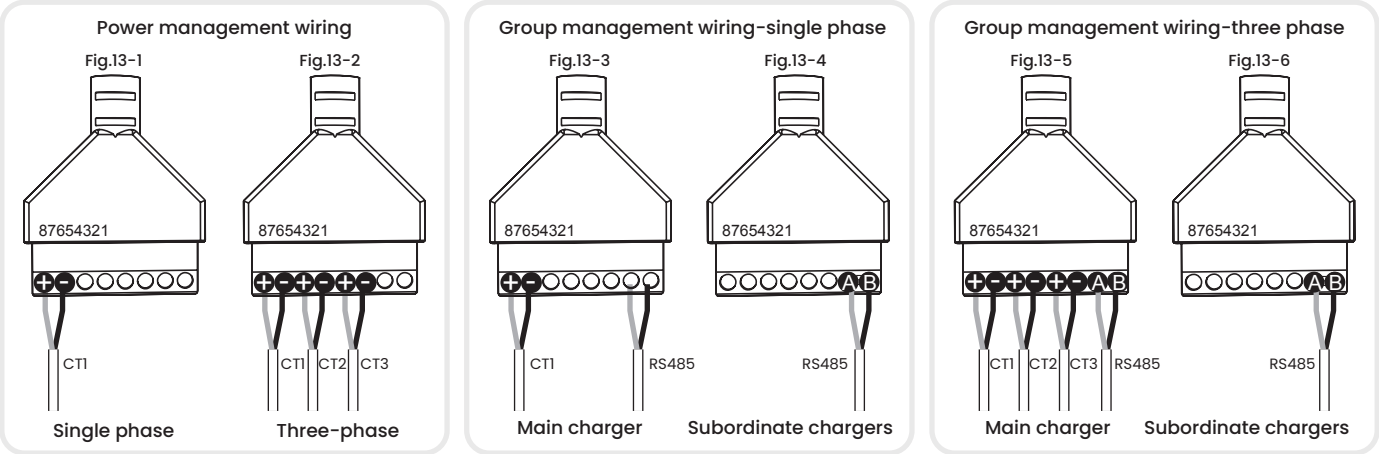

A Network Connection guide

1. Remove the circular cover 2 (*Fig.1*) on the left side at the bottom of the unit.
2. Use the accessory Cable Gland PG19 to fix the network cable.
3. The built-in rubber ring needs to be replaced with the rubber ring A of the accessory, cut open with knife, The ethernet cable passes through the Cable Gland PG19 and is fixed to the mounting base.

> **Note:** During installation, if the network cable line and the plug is separate, you don't have to cut the sealing rubber.

4. Network cable plug is docked to ethernet socket.

Fig. 14

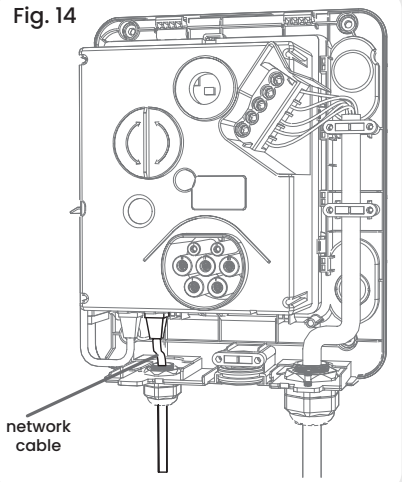

B Installation of 4G card

Contrarotate to open the cover on the main body. Push down and then open the card slot cover, insert the 4G card into the 4G card slot, make sure the direction is correct. Close then push the slot cover upwards.

Fig. 15

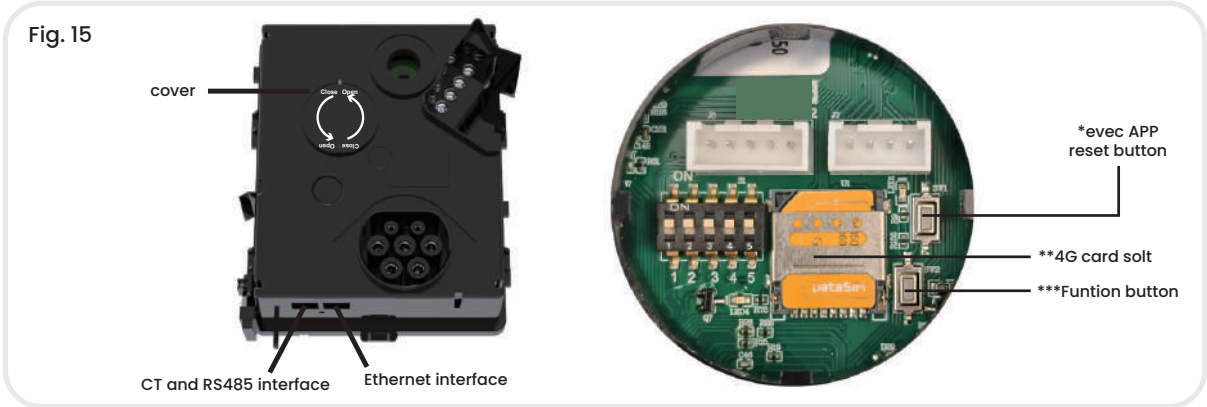

Configure URL/ID/APN using ethernet

WARNING: This operation must be completed by qualified electrical installers.

1. Power on the product without front cover, on the standby state (the blue light is glowing), press and hold the function button for 10s, when hearing beep twice, power off the charger within 10 minutes.

2. After power off the product, connect the product (Ethernet socket on PCB) with the PC by Ethernet cable with double-headed RJ45 plug.
Note: Please refer to the wiring diagram for the ocation of Ethernet socket on PCB.

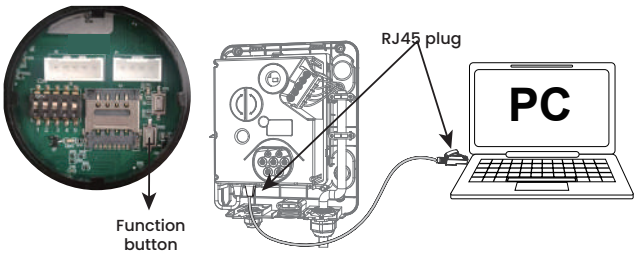

3. Re-power on the product, waiting for the cyan light to turn yellow, then the product has entered the configuration state.

4. Parameter setting by PC. Configure internet Protocol version 4(TCP/IPv4) parameters.
IP address: **192.168.1.26**
Subnet mask: **255.255.255.0**
IPv4 gateway/Router: **192.168.1.1**

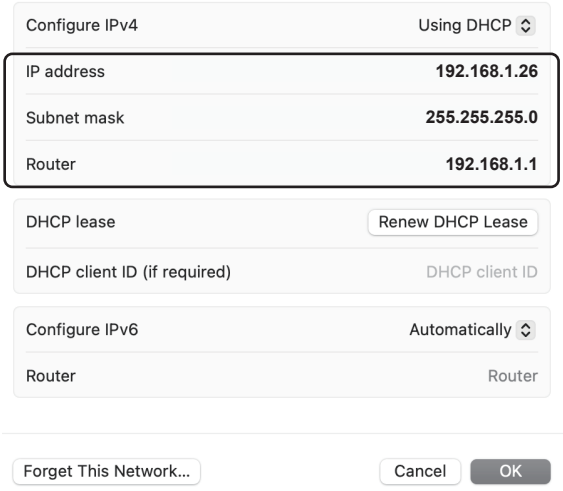

Important
1) Must be filled in strictly according to the above parameters.
2) DNS does not need to be filled in.

5. Open the Web (Google) enter **192.168.1.30** to enter the configuration interface.

Note: Please ensure that the RJ45 plug is reliably connected to the PC and Ethernet socket (on the PCB of the EV charger), (follow step 2 above). Otherwise, you will not be able to link to the webpage.

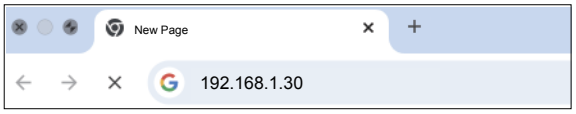

6. After entering the configuration page, you can set ChargeID(Maxlen 32), Server URL (Maxlen 100).
Note: The URL(wss://ocpp.monta.app/) Please don't ignore the last character " / ", as it is very important).

6.1) Set ID and URL

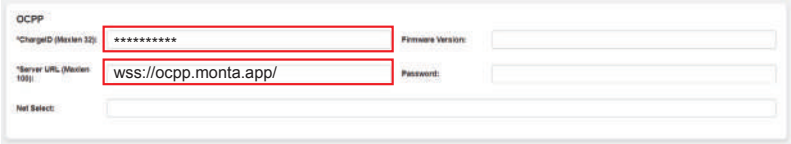

6.2) WiFi networking method, you also need to enter WiFi account and password on this page.Enter WIFI account and password

6.3) 4G networking method, you also need to enter 4G APN on this page, enter 4G APN.

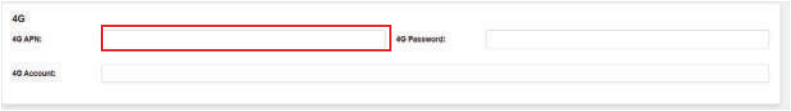

7. After completing the filling, click submit to save, and the configuration completed.

8. Power off again, disconnect the Ethernet cable between the product and PC, and the product needs to replace the network cable with signal. Power on, it will automatically connect to the server to enable backstage control.

Configure URL/ID/APN by phone (IOS System)

WARNING: This operation must be completed by qualified electrical installers.
Note: phone (Only supporting IOS system) and Type-C to RJ45 network cable need to be prepared.

1. Power on the product without front cover, on the standby state (the blue light is glowing), press and hold the **function button** for 10s, when hearing beep twice, power off the charger within 10 minutes.
2. After power off the product, connect the product (Ethernet socket on PCB) with the phone by Type-C to RJ45 network cable..
   Note: Please refer to the wiring diagram for the location of Ethernet socket on PCB.
3. Re-power on the charger, waiting for the cyan light to turn yellow, then the charger as entered the configuration state.
4. Parameter setting by phone, refer to below.

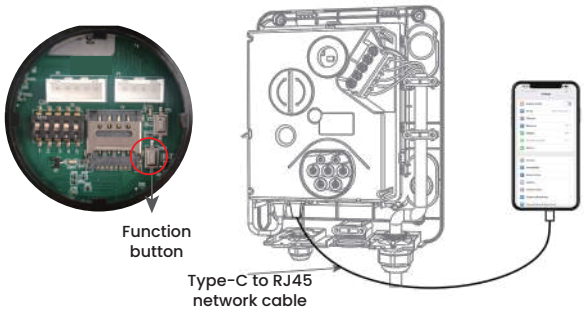

Turn off the "WIFI" and "Cellular Data"

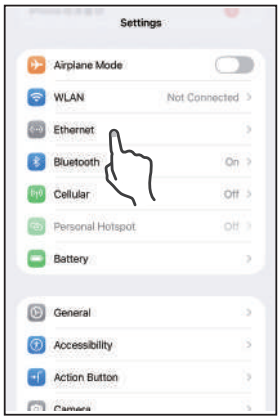

"Settings" interface click "Ethernet"

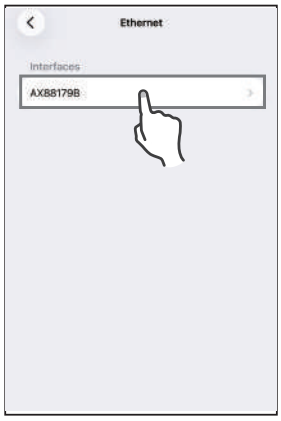

"Ethernet" interface click "Ethernet name"

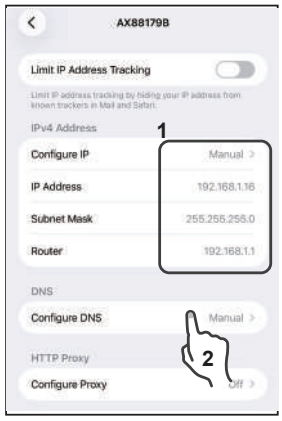

Set configure IP: **Manual**
Set IP address: **192.168.1.26**
Set subnet mask: **255.255.255.0**
Set router: **192.168.1.1**
Then click **'Configure DNS'**

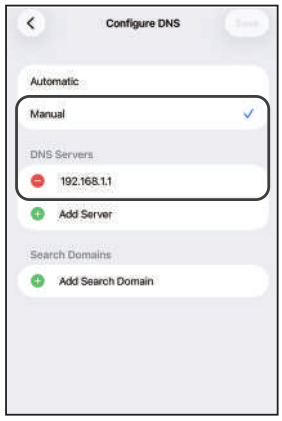

Configure DNS interface
Click: "**Manual**"
ADD Server "**192.168.1.1**"

5. Open the phone's built-in browser (Safari),and enter **192.168.1.30** in the search box. 192.168.1.30
6. After entering the configuration page, you can set ChargeID(Maxlen 32), Server URL (Maxlen 100).
   Note: The URL(wss://ocpp.monta.app/) Please don't ignore the last character " / ", as it is very important).

   6.1) Set ID and URL

   6.2) WiFi networking method, you also need to enter WiFi account and password on this page.Enter WIFI account and password

   6.3) 4G networking method, you also need to enter 4G APN on this page, enter 4G APN.

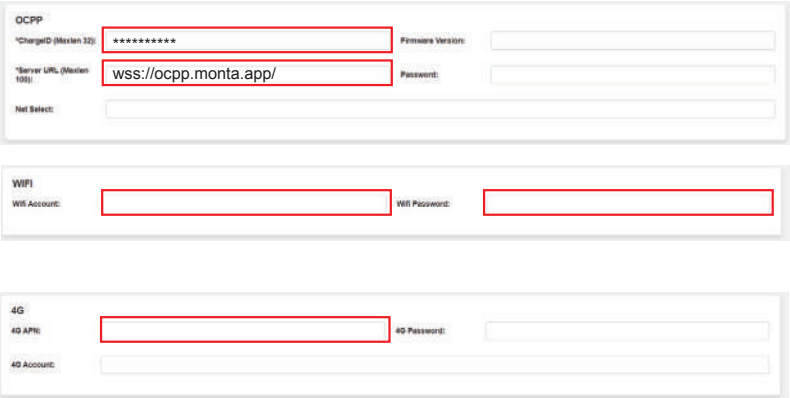

7. After completing the filling, click submit to save, and the configuration completed.
8. Power off again, disconnect the Ethernet cable between the product and PC, and the product needs to replace the network cable with signal. Power on, it will automatically connect to the server to enable backstage control.

Power management function installation guide

1. Remove the circular cover 2 (*Fig.1*) on the left side at the bottom of the unit.
2. Use the accessory Cable Gland PG19 to fix the CT wire.
3. The built-in rubber ring needs to be replaced with the rubber ring A of the accessory, cut open with knife. The CT wire passes through the Cable Gland PG19 and is fixed to the mounting base.
4. Crimp the CT wire to the CT wire terminal and then insert it into the CT interface. (single phase model refer to *Fig.13-1*, three-phase refer to *Fig.13-2*).
5. Open the CT and fixed it to the main incoming line (one CT is only allowed to pass through one line.)

   Note: If there is a need to extend the CT cable. To maintain signal integrity, twisted-pair cable like CAT5 (8×24AWG wires inside) must be used. **DO NOT** use mains cable, bell wire or speaker cable.When using CAT5 (8×24AWG wires inside) ethernet cables for extension:

The number of 24AWG wires	Double wires for one	Triple wires for one	Four wires for one
Max. transmission distance	100m	500m	750m

- Remember to a separated twisted pair for each CT.
- When joining CT wires make sure that the ends of the wires are twisted tightly together and joined using crimps, screw terminals or solder.
- Avoid using lever clamp type terminals as these do not provide a reliable connection at very low currents.

Power management wiring for single phase models (VEC01-N /VEC03-N)

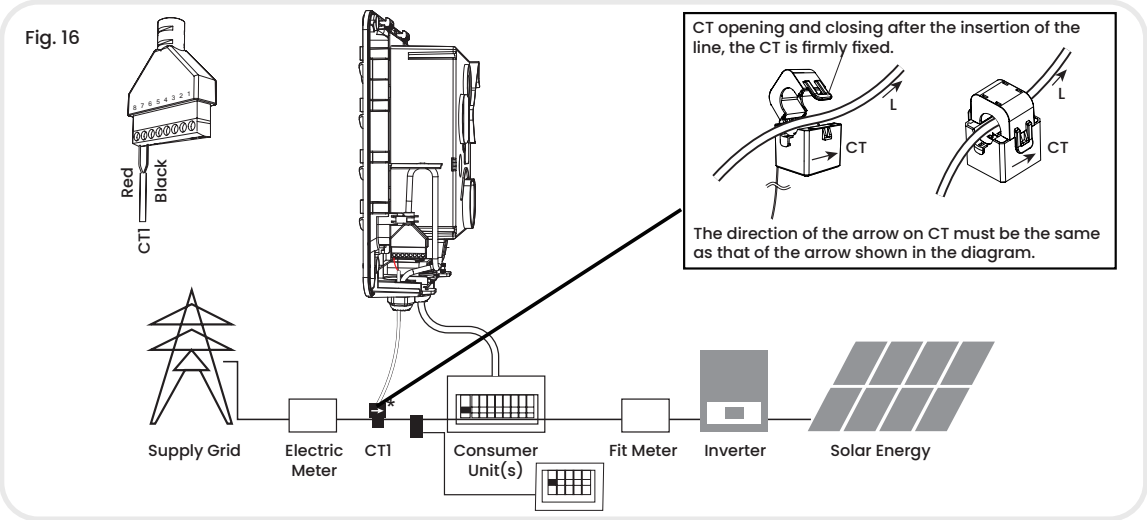

Power management wiring for three-phase models(VEC02-N /VEC04-N)

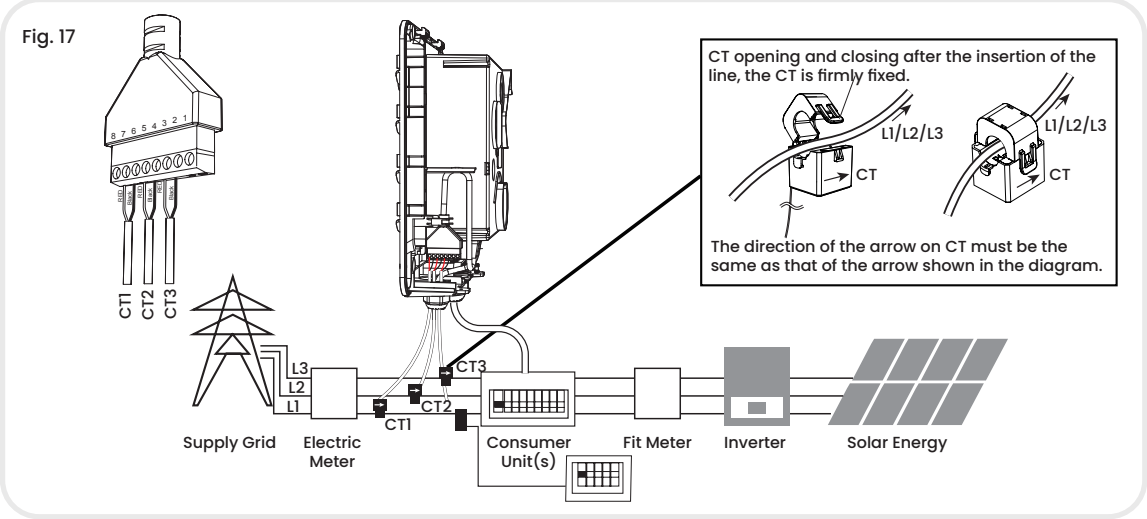

EV charger group management model guide

Important

1) Before using the charger group management model, you need to know the Main charger and the subordinate charger
2) Main charger:The only charger in the charger group management connected with CT clamp and set as 1300 charger number in APP.

Subordinate charger: Other chargers in the charger group management maximum number of chargers that can be group managed is 9 and this is to be set in the App as 1301 – 1309 under enter charging pile code. So for the main charger the code will be 1300 and the second charger as 1301 and the third as 1302 and so on depending on the number of chargers, and set as 1301-1309 charger number in APP.
Note: The setting of charger number refers to "Enter charging pile code" in APP settings.
Note: If group management is used then the solar function cannot be used.

1. Remove the circular cover 2 (*Fig.1*) on the left side at the bottom of the unit.
2. Use the accessory Cable Gland B to fix the CT wire or shielded twisted-pair.
3. **Main charger:** Fix the CT (400A) wire and shielded twisted-pair.
   Subordinate charger: Just fix the shielded twisted-pair.

3.1 **Main charger:** thread the CT cable and shielded twisted-pair into Cable Gland B. Then reserve enough length to connect to the CT socket and terminal block.

3.2 **Subordinate charger:** thread the shielded twisted-pair into Cable Gland B. Then reserve enough length to connect to the CT socket and terminal block.

4. Crimp the CT wire to the CT wire terminal refer to (*Fig.18*). Press the red button on the CT clamp to open it and fixed it to the main incoming line (one CT is only allowed to pass through one line
5. Crimp the shielded twisted-pair wire to RS485 terminal block.
6. Connect all shielded twisted-pair from the subordinate charger in parallel to the main charger (*Fig.18*).
7. The setting of charger number refers to "Enter charging pile code" in APP settings.
   Main charger code is 1300.
   Subordinate charger code is 1301 - 1309.

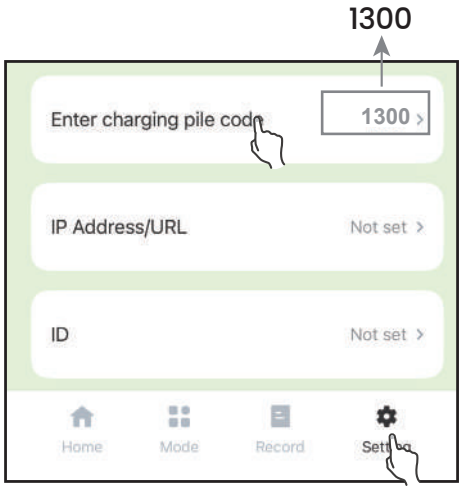

Main charger pile

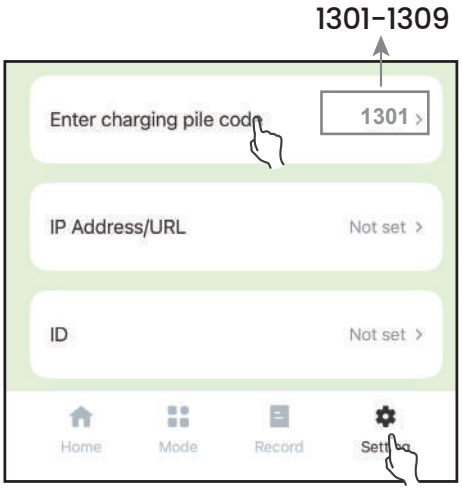

Subordinate charger piles

Fig. 18

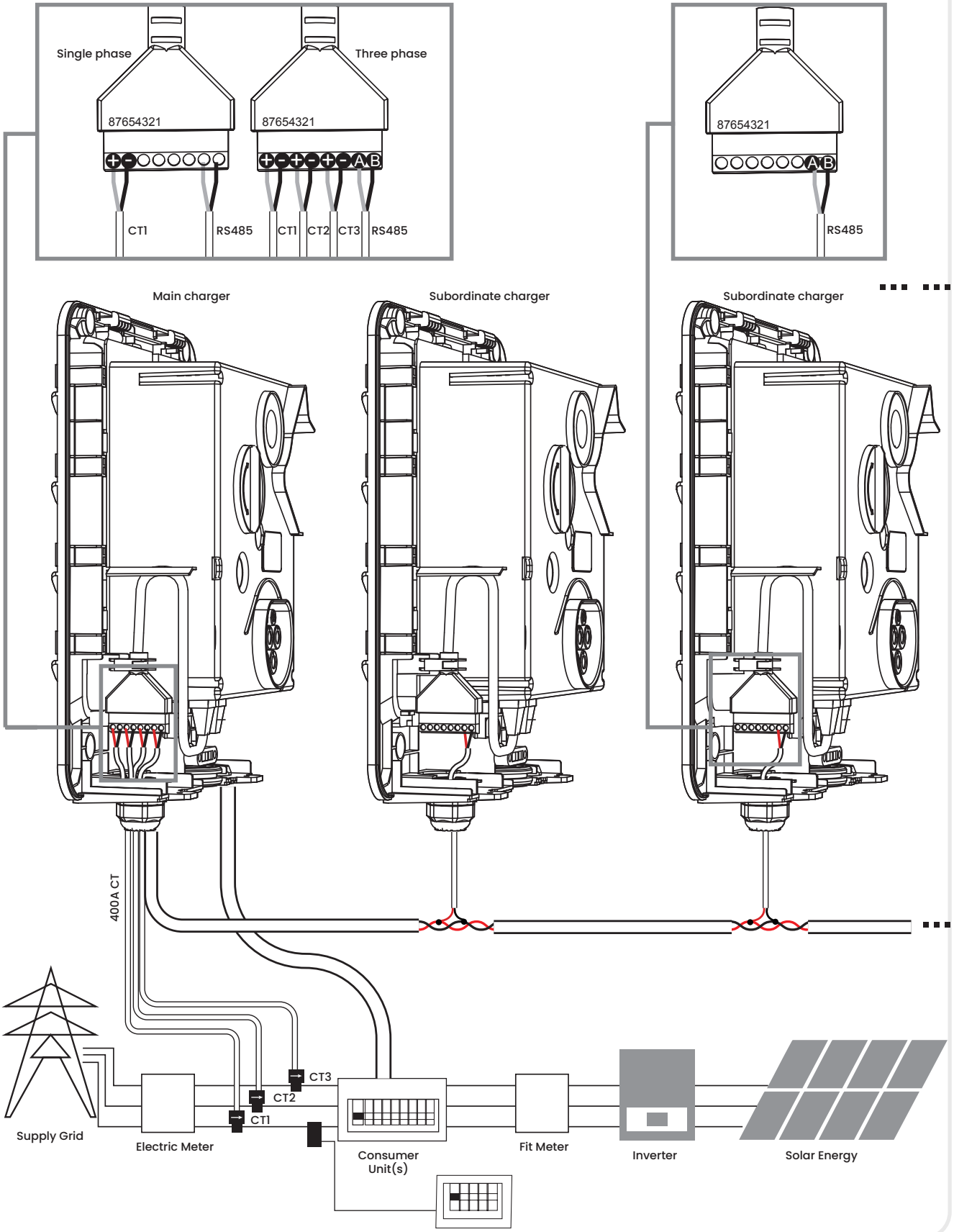
Single phase
87654321
CT1
RS485
Three phase
87654321
CT1
CT2
CT3
RS485
A B
87654321
A B
RS485
Main charger
Subordinate charger
Subordinate charger
400A CT
CT3
CT2
CT1
Supply Grid
Electric Meter
Consumer Unit(s)
Fit Meter
Inverter
Solar Energy

Set the dip switch

You need to set the corresponding position of the current DIP switch according to the min. wire size shown in the chart and the rated current of the Circuit breaker (factory setting 32A). Refer to the steps below.

Caution 1: The following operations must be powered off.

Caution 2: Incorrect setting DIP may cause hazards such as overheating or fire of the incoming wire.

1. Locate the position of the DIP switch on the power supply board, like picture.
2. Setting the switch to the desired position.

WARNING: Electrical Power Switches must only be set by a qualified electrical installer. Incorrect setting may lead to equipment damage and / or personal injury. The current rating must not exceed the supply rating.

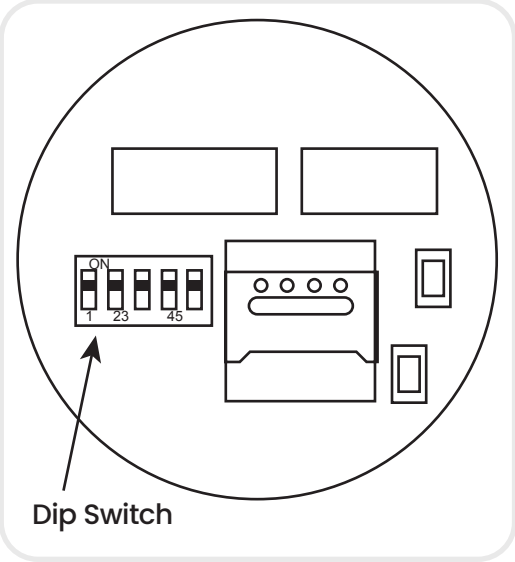

DIP switch position	ON 1	ON 1
Current (A)	32	16
Min.wire size (copper)	6mm² or 10AWG	2.5mm² or 13AWG
Circuit breaker (Amps)	40	20

Inspection

1. **Check that this unit must be grounded (Earthed).**
2. Make sure you are satisfied that the installation is complete and is in a safe condition.
3. Switch ON the power, which it will cycle the red, blue and green lights to self-check and then enter the corresponding light indication. The unit and test in accordance with the current Electrical Wiring Regulations.

   Note: Make sure this product has been installed in compliance with the current Electrical Wiring Regulations.

Register

1. Application platform download **evec** app. You can download it through the QR code on the front cover page of this manual , or google store or app store.

2. Open the **evec** app, register an account to log in.

Note: You can register your account through your mobile phone number or email. The following takes mobile phone number registration as an example to describe the steps in detail.

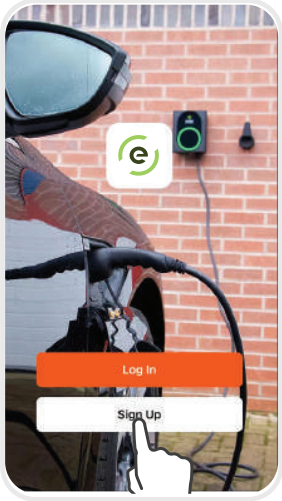

2.1 Click the sign up

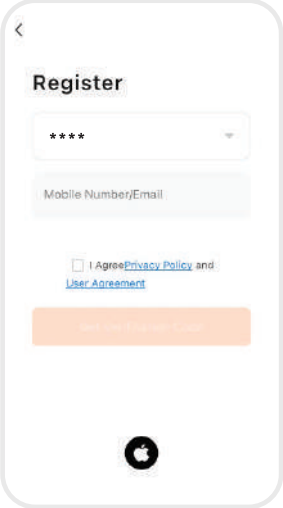

2.2 Check the app agreement, enter the registered mobile phone number and click to get the verification code.

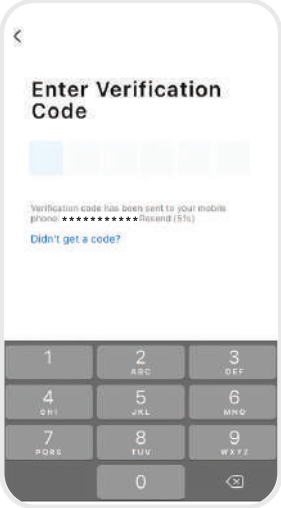

2.3 Input verification code.

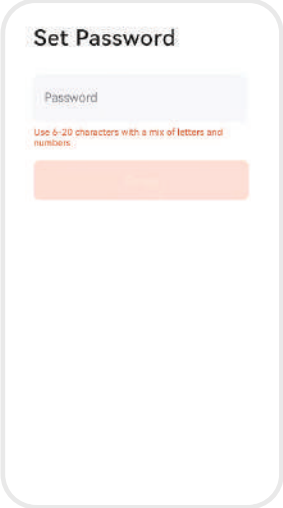

2.4 Input the account login password and click done to complete the registration.

Add Device

3. Click log in on the App, input the newly registered account and password to log in to the **evec** app.

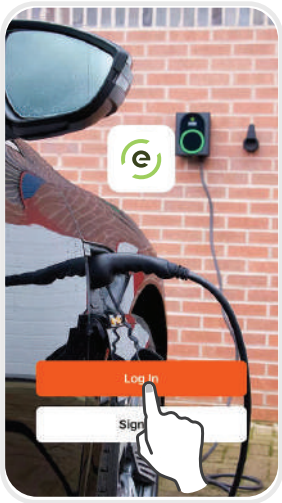

3.1 Click log in

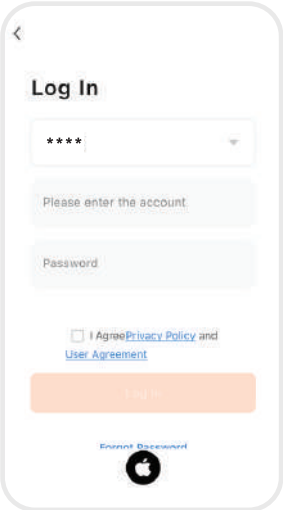

3.2 Check the app agreement, enter the registered account and password, and click log in.

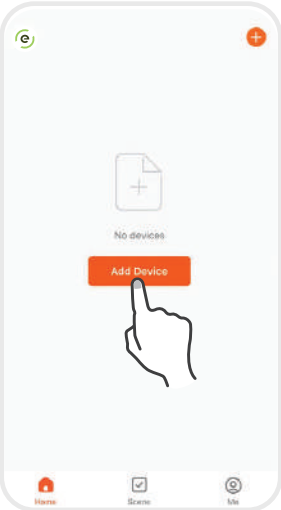

3.3 Add device.

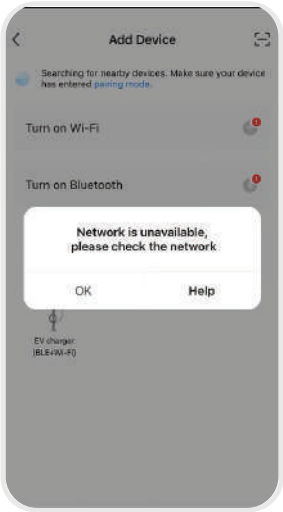

3.4 Network and bluetooth not turned on.

4. Press the function button on the charger for 10s (beep 2 times) to reset the wifi (refer to the function button instruction for the wifi reset operation guide). Click "Add Device" to add the charger device that needs to be connected.

Note: Make sure the charging lead is not plugged into a car before adding the device.

5. After turning on wifi , bluetooth and geolocation, the **evec** app automatically searches for the charger.

   Note: When connecting the charger, the mobile phone must be **close** vicinity to the charger.

   Note: The charger needs to be connected to WiFi. If the WiFi signal is weak or absent, the charger will not receive the signal or delay the connection. Therefore it is recommended to add an enhancement device for WiFi receiving signal near the charger.

   Note: To check if your WiFi can reach the charger and have a good signal check your smart device or smart phone whilst standing close to the charger with the WiFi tuned on if the signal can be seen above 2 bars then it is ok if not a WiFi booster or repeater needs to be added. Note.The ethernet port is not for the smart app it is only for OCPP use.

6. After clicking **ADD**, enter the wifi and wifi password, wait for the device to connect to the network.

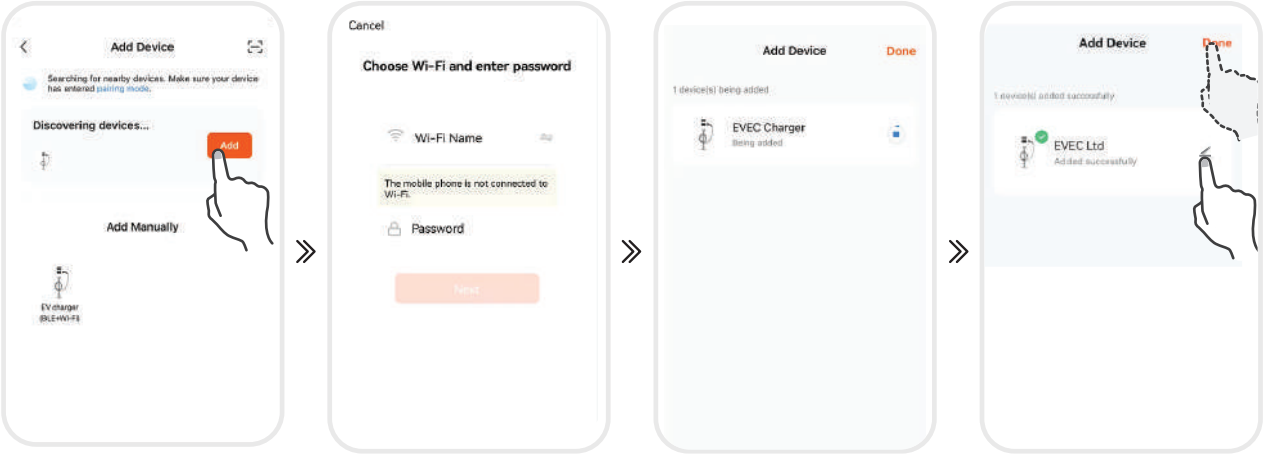

6.1 Click Add

6.2 Enter WiFi name and password, then click the next

6.3 Loading

7 Done

7. If you need add a new device name, click " ✎ " , if not click "done" to confirm the connection is successful.

8. The first connection will appear with the default screen, you can select the default mode, edit the charging time or select the manual mode.

9. Click manual mode.

10. Connecting to the car, after click '**Turn on**' to start charging, then the charger will charging after randomized delay.

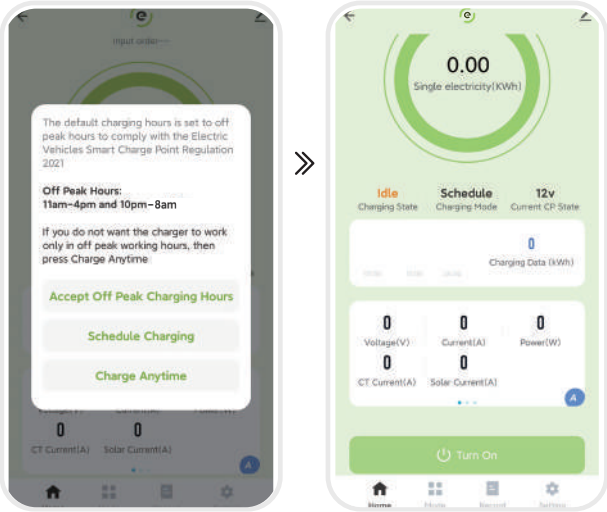

8 Default selection interface

10 Device control interface.

Operate Introduction

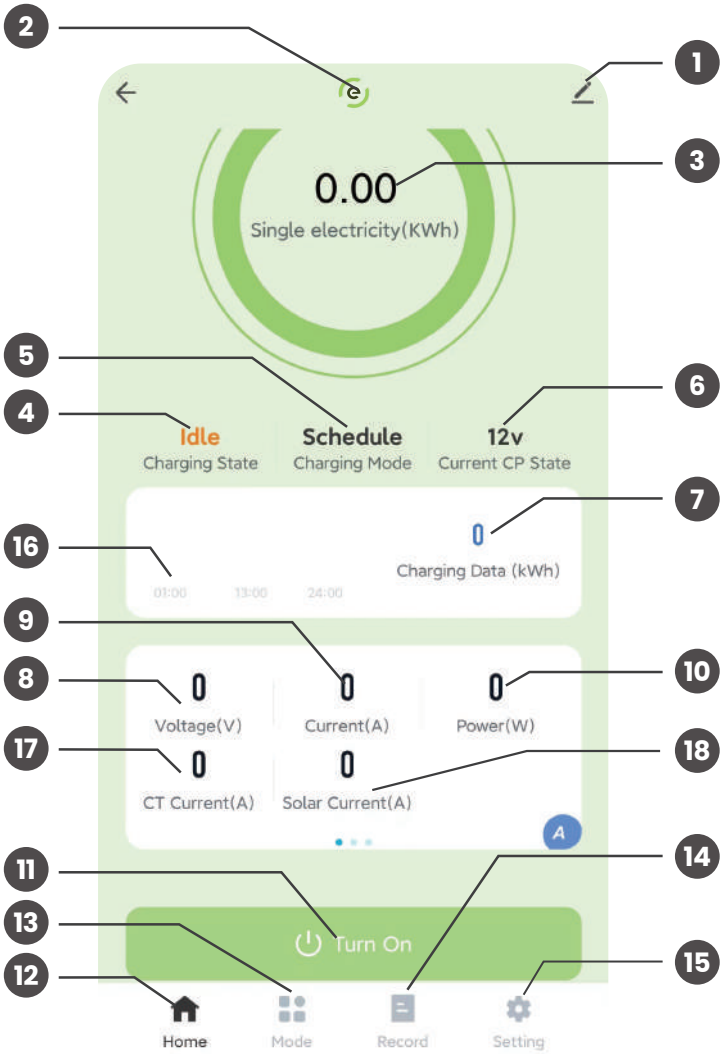

Interface Introduction

1. Edit
2. Device name
3. Single charging energy consumption
4. Charging state
5. Charging mode
6. CP state cumulative
7. Charging energy consumption
8. Charging voltage
9. Charging current
10. Charging power
11. Turn on/off
12. HOME
13. Mode
14. Record
15. Setting
16. Energy consumption record
17. CT clamp Maximum current
18. Solar current

1 Edit

1.1 You can set the charger name by clicking "✎".

1.2 **Offline Notification:** When the charger is powered off, it will prompt the device to be offline on the home screen.

1.3 **Share Device:** You can share the app with others by share device. Shared users only have the using right and cannot share the app again.

Note: When using evec account to share,the shared account can be added the device without any openation.

Refer to the following steps:

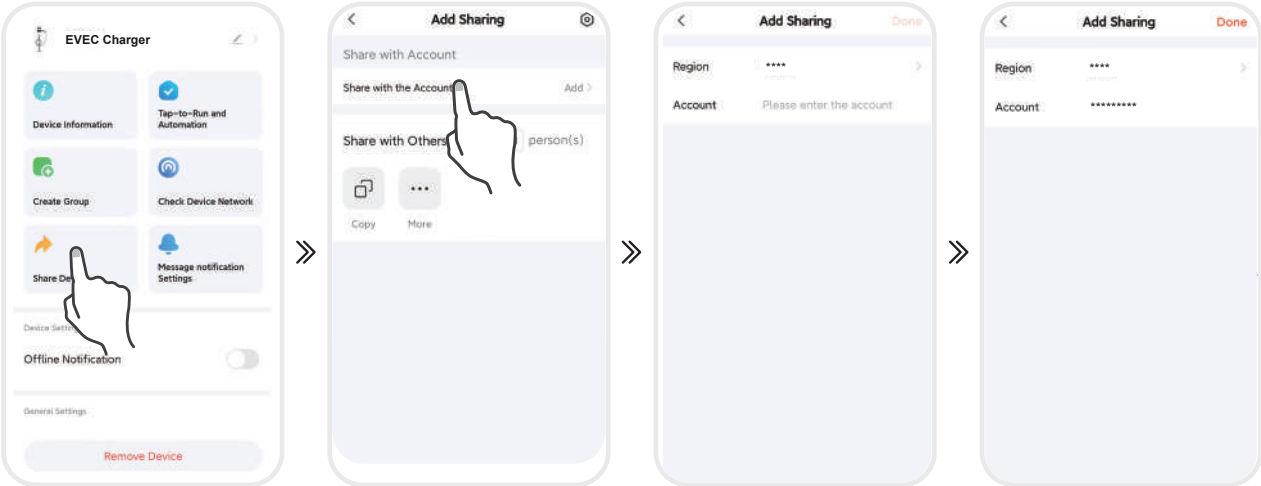

1 Click "Share Device"

2 Click "Share with the account"

3 Input evec account

4 Done

1.4 Software Update: When their is a software update available a message will appear on the app screen to confirm the update.

1.5 Remove device
Remove: Disconnect device connection
Remove and Clear Data: Disconnect device connection and wipe "Charging record" and "Error Log"data .

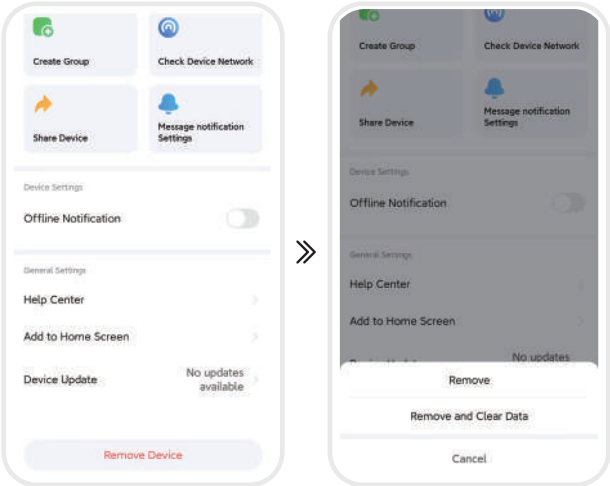

13 Charging Mode

1 ✓ **Manual mode:** Control the charger by turning on and turning off the charger on the app. When on the manual mode if the charger is left enabled on the App the charger can be used as plug and charge mode.

When on the manual mode if the charger is turned off, plug and charge mode is turned off. To control the charger this has to be done on the app by pressing enable.

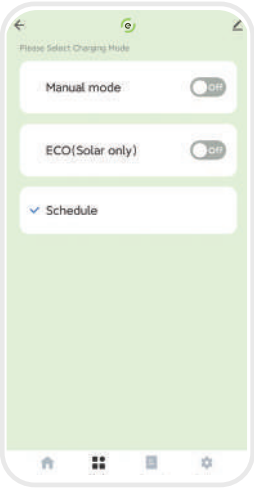

Charging Mode

2 ✓ **ECO(Solar only):** The product is in ECO mode.

When✓ in **ECO (For solar)** mode, the charger will use the electricity generated by the solar system to charge the car.
ECO(For solar) is on, on the car can be charged immediately by plugging in the gun in the solar mode.
ECO(For solar) is off, off you still need to swipe your card or manually clicking "turn on" in the app to start charging.

I Software Update: When their is a software update available a message will appear on the app screen to confirm the update.

1 When the product has not started charging, the unit can be started when the CT detects that the current I is greater than 8A, the unit can be charged according to current I-2A, and the maximum charging current is the rated output current. When the current I is detected to be less than 8A, the unit cannot start charging.

2 During charging, when the charging current is greater than 6A, the charging current will change with the CT detection current I-2A; When the charging current is equal to 6A and the CT detection current is less than 2A,the charging is suspended, and the charging is resumed when the detection current I is greater than 8A.

Note: Models without solar function (not connected the power management CT wiring)can not charging.

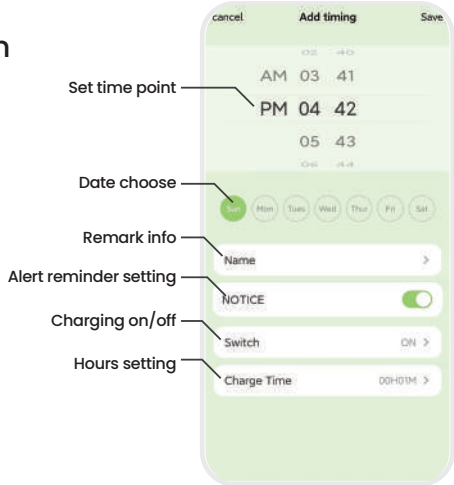

Charging Mode

3 ✓ **Schedule:** Timed charging. In Schedule, you can set the charging time period according to your needs.

Note: When you choose the set time point to turn off the charging, there is no hours setting.

Note: When you choose the set time point to turn on the charging, you must adjust the hours setting, otherwise the default charging time is only 1 minute.

14 Record

You can view "Charging record" and "Error log" on this interface.

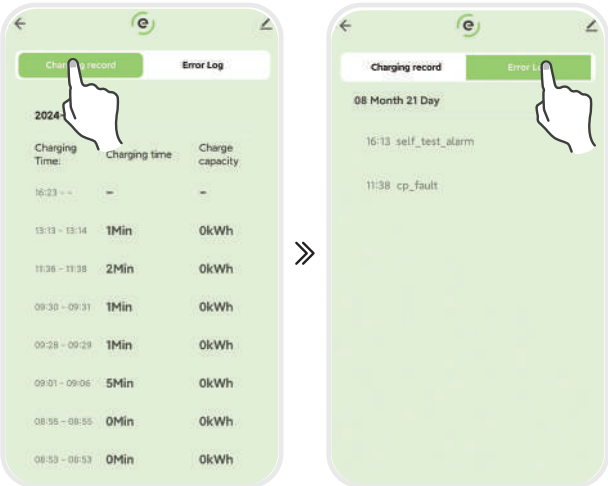

15 Setting

1. **Set Current (A):** You can set max charging current, max charging current not more than the current of DIP switch setting.
   Note: After the App is connected at the first time. The current value displayed here is not the set current value. It is acurrent-setting page.
   Note: It will take effect only after clicking to enter to set any current value and the current value adjustment range is 6-32A
   Note: If the current value has never been set here, the value displayed here is invalid.

2. **DLB value** (Dynamic Load Balancing)**:** You can set power management from this tab, To use this function a CT clamp is required. To set maximum current:
   1) Click DLB tab to enter command input field.
   2) Input value, this value is the limited protection value of household entry current, the setting range is 0-999, and the factory default setting is 999 (the system will automatically optimize the current value when the actual value is 5 less than the value set):the setting value is recommended to be set according to the rated current value of the total household current.

3. **Temperature:** Displays the chargers interior temperature.

4. **Enter charging pile code:** Only used for charger group management model, main charger code is 1300, subordinate charger code is 1301 - 1309. If the charger group set up to the home charger, you need to enter 1555.
   Note: Other code are invalid.

5. **IP Address/URL:** Change the address of the OCPP back-office server.

6. **ID:** The product name in the OCPP back-office server.
   Note: Make sure the ID is unique.
   Note: After the ID is replaced, it can be concluded that the ID replacement is complete only when the Device number is consistent with the replaced ID. If the Device number does not change after changing the ID, you can exit the app and then power off and restart the EV charger.
   Note: After the IP or ID is replaced, it must be powered off and restarted to take effect.

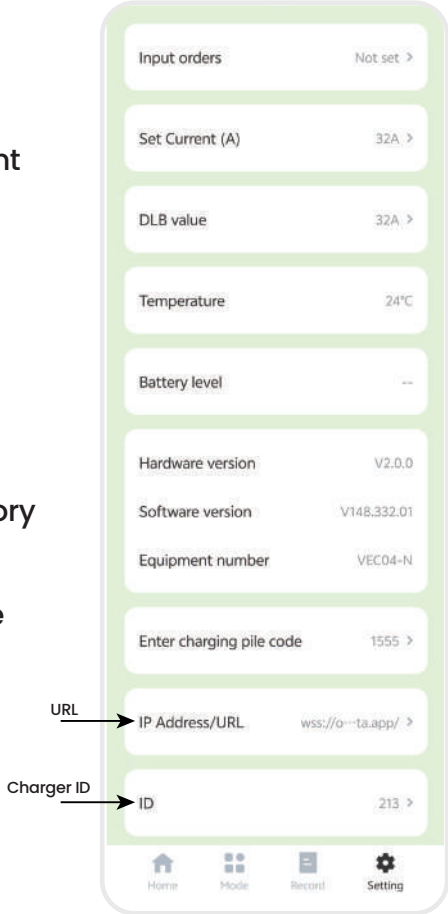

Service interface

Press and hold "**Turn on**" for 10 seconds to enter Service interface. Then click "Overvoltage and undervoltage" you can set:

WI-FI SSID: Manually enter the name of the WIFI network that needs to be connected;(For example, you can use office, home, and other WIFI, but you need sufficient signal strength).

WI-FI-password: Enter the WIFI password corresponding to the above WIFI name.

Service interface

Press and hold "**Turn on**" for 10 seconds to enter Service interface. Then click "Overvoltage and undervoltage" you can set:

WI-FI SSID: Manually enter the name of the WIFI network that needs to be connected;(For example, you can use office, home, and other WIFI, but you need sufficient signal strength).

WI-FI-password: Enter the WIFI password corresponding to the above WIFI name.

Set up the RFID card for the customer

In the app "**Setting**" interface, "**Input orders**" option, enter the card No. on the front of the RFID card:
SPEVC##########, then "**Confirm**".

Note: Do not use any spaces.

Test it by plugging in the car and swiping the card. Charging should start. If you get 2 bees, then the number is wrong or there was as space between the full stop. Both supplied cards have the same number so you only need to do this once.

RFID Card

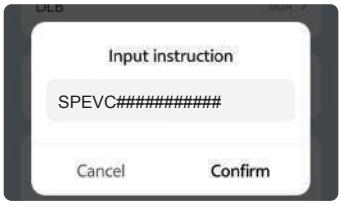

Setting Interface

Fault Interface

If device has fault, you can view the cause of the failure in the centre of the main interface of the app.

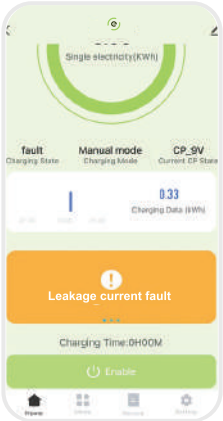

Alarm

If there is unauthorized attempted access off the charger software detects this tampering and this is reported via the app.

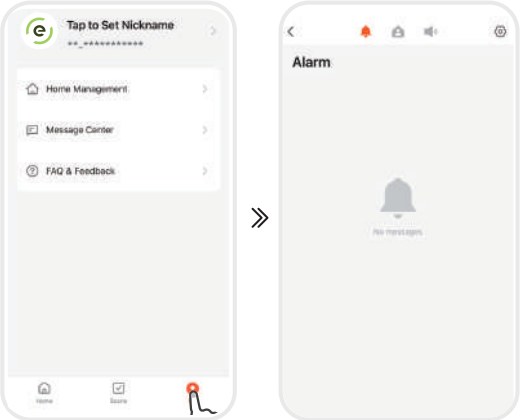

Register on the evec app

Follow the OVO process to bind the evec charger

Enter the evec account and select the device

VEC01-N / VEC02-N / VEC03-N / VEC04-N

Continue binding successfully

The charger enclosure does NOT need to be opened for routine maintenance tasks.

1. Regularly clean the external surfaces of the equipment with a damp cloth. In order to avoid damaging the surface smoothness, do not clean the internal parts with soluble substances and alcohol.

2. Regularly inspect the exterior of the equipment for visual damage, if damage affects safety, isolate the equipment and prevent its use until appropriate repairs have been completed.

3. Once a year, the charger and switchgear (if installed) should be electrically inspected by an appropriately qualified electrician in accordance with the current legislation for the installation location. A record of the tests and results must be kept.

Red light flashing	One fast, two slow	CP fault
	Two fast, two slow	Leakage current fault
	Two fast, one slow	Over current
	Three fast, one slow	Leakage current fault
	Three fast, two slow	Under voltage fault
	Four fast, one slow	Over voltage fault
	Six fast, two slow	Adhesion fault
	Seven fast, one slow	Earth fault
	Red light glowing	Over temperature
	Six fast, three slow	Electronic lock fault
	Three fast, three slow	Free fault
	Five fast, one slow	Self-check for PEN leakage failed

evec
for everyone

Unit 8 Coronet Way Salford M50 1RE

Customer Services & Spare Parts | Call: 0161 249 6780 | Opening Times: 8am-5pm, Monday-Friday

Product Disposal

In accordance with European Directive 2002/96/EC on waste electrical and electronic equipment and its implementation in national law, used electrical devices must be collected separately and recycled in an environmentally responsible manner. Ensure you return your used device to your dealer or obtain information regarding a local, authorised collection and disposal system. Failure to comply with this EU Directive may result in a negative impact on the environment.

USE MANUAL PICTURES JUST AS REFERENCE ONLY, DETAILS SUBJECT TO ACTUAL PRODUCT.

Cod: 003030